Ball Lock Pins • self-locking, with standard handle

22370.0030

Product Description

For quick fastening, locking, adjusting, changing and securing. Quickly and easily unlockable for frequently repeated connections.
All versions are corrosion resistant. When using stainless steel 1.4542: high-strength, hardened, abrasion resistant pin with high load capacity.
Compact design with standard handle.

Material

Pin part
- Stainless steel 1.4305

Spring
- Stainless steel

Operation

The balls are unlocked by pressing the button.

Characteristic

Types from stainless steel 1.4542 with marking below the balls.

More information

Notes

Special types on request.

Accessories

Can easily be fitted with retaining cable EH 22400.

Further products

- Ball Lock Pins, self-locking, with standard handle, titanium
- Locating Bushings, for ball lock pins and socket pins
- Locating Bushings, with flange, for ball lock pins and socket pins
- Retaining Cables
- Positioning Bushings, with collar, DIN 172 A
- Positioning Bushings, without collar, DIN 179 A

Drawing

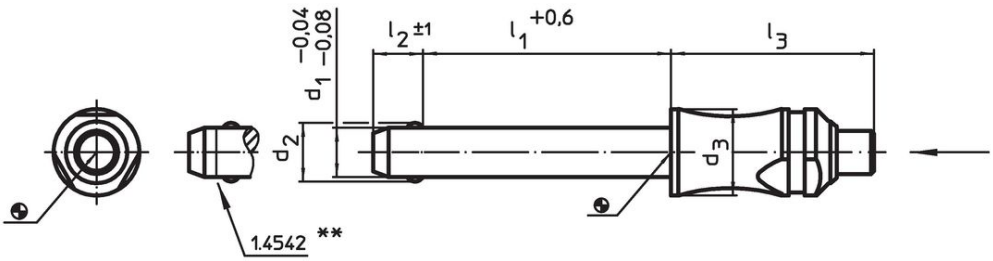

** Types from stainless steel 1.4542 with marking.

Order information

Dimensions						Location hole H11	max.		Shearing resistance, two-shear[1] min.	Art. No.
d_1 -0.04 -0.08	l_1 +0.6	d_2	d_3	l_2 ±1	l_3					
[mm]						[mm]	[°C]	[g]	[kN]	
Stainless steel										
6	**50**	7	10	7	26.2	6	250	19	21	22370.0030

[1] Shearing resistance similar to DIN 50141

Application example

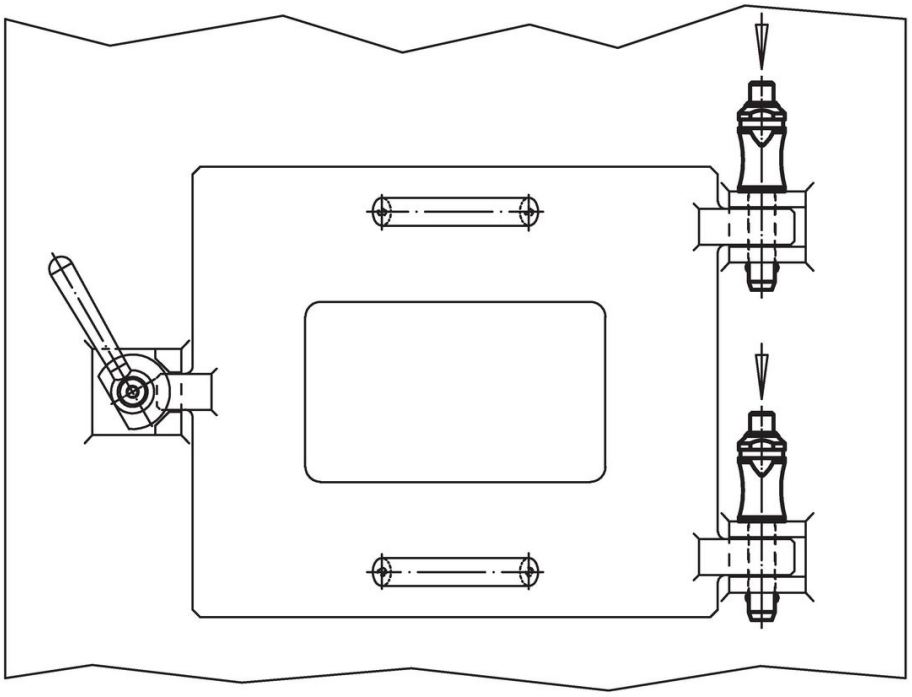

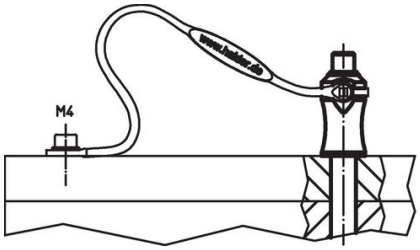

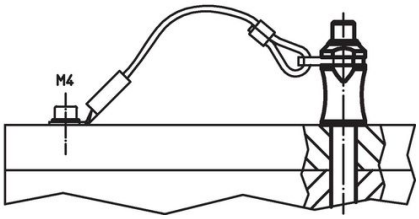

Compliance

RoHS compliant
Compliant according to Directive 2011/65/EU and Directive 2015/863.

Does not contain SVHC substances
No SVHC substances with more than 0.1% w/w contained - SVHC list [REACH] as of 23.01.2024.

Does not contain Proposition 65 substances
No Proposition 65 substances included.
https://www.P65Warnings.ca.gov/

Free from Conflict Minerals
This product does not contain any substances designated as "conflict minerals" such as tantalum, tin, gold or tungsten from the Democratic Republic of Congo or adjacent countries.