# 定位柱 • 有球形和内六角

## EH 22030.

### 产品描述

适用于定位、供压或顶举。

#### 材质

**本体**
- 切削钢， 染黑
- 不锈钢 1.4305

**珠子**
- 轴承钢，硬化
- 不锈钢，硬化

**弹簧**
- 不锈钢

#### 特性

标准弹簧荷重: 无标示
强化弹簧荷重: 以两条线标示

Standard spring load

Heavy spring load

#### 更多信息

**注意事项**

特殊的样式欢迎洽询。
定位柱经过特别测试，以得知其弹簧的范围和作用。

**参考**

需求的螺纹锁，请参阅附录 - 技术数据 - 索引阻力的计算，细节请参考本章节的起始。

### 图面

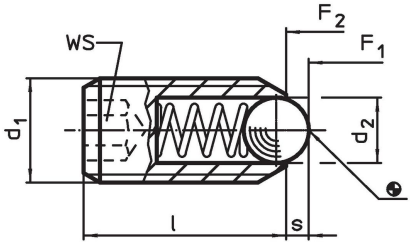


### 订单信息

| 尺寸 $d_1$ | 尺寸 $d_2$ | 尺寸 l | WS | 行程 s | 弹簧荷重 1) $F_1$ ~ | 弹簧荷重 1) $F_2$ ~ | max. | | 品号 |
|---|---|---|---|---|---|---|---|---|---|
| [mm] | | | [mm] | [mm] | [N] | | [°C] | [g] | |
| **切削钢， 标准弹簧荷重** | | | | | | | | | |
| **M 3** | 1,5 | 8 | 1,5 | 0,4 | 3,0 | 4,5 | 250 | 0,2 | 22030.0003 |
| **M 4** | 2,5 | 12 | 2,0 | 0,8 | 8,5 | 14,0 | 250 | 0,6 | 22030.0004 |
| **M 5** | 3,0 | 14 | 2,5 | 0,9 | 8,0 | 14,0 | 250 | 1,2 | 22030.0005 |
| **M 6** | 3,5 | 15 | 3,0 | 1,0 | 11,0 | 18,0 | 250 | 1,7 | 22030.0006 |
| **M 8** | 4,5 | 18 | 4,0 | 1,5 | 18,0 | 31,0 | 250 | 3,9 | 22030.0008 |
| **M10** | 6,0 | 23 | 5,0 | 2,0 | 24,0 | 45,0 | 250 | 8,0 | 22030.0010 |
| **M12** | 8,0 | 26 | 6,0 | 2,5 | 26,0 | 49,0 | 250 | 13,0 | 22030.0012 |
| **M16** | 10,0 | 33 | 8,0 | 3,5 | 41,0 | 86,0 | 250 | 32,0 | 22030.0016 |
| **M20** | 12,0 | 43 | 10,0 | 4,5 | 56,0 | 111,0 | 250 | 67,0 | 22030.0020 |
| **M24** | 15,0 | 48 | 12,0 | 5,5 | 81,0 | 151,0 | 250 | 105,0 | 22030.0024 |
| **切削钢， 增强 弹簧荷重** | | | | | | | | | |
| **M 3** | 1,5 | 8 | 1,5 | 0,4 | 5,0 | 9,0 | 250 | 0,3 | 22030.0043 |
| **M 4** | 2,5 | 12 | 2,0 | 0,8 | 12,0 | 18,0 | 250 | 0,6 | 22030.0044 |
| **M 5** | 3,0 | 14 | 2,5 | 0,9 | 15,0 | 22,0 | 250 | 1,2 | 22030.0045 |
| **M 6** | 3,5 | 15 | 3,0 | 1,0 | 19,0 | 28,0 | 250 | 1,7 | 22030.0046 |
| **M 8** | 4,5 | 18 | 4,0 | 1,5 | 36,0 | 62,0 | 250 | 4,0 | 22030.0048 |
| **M10** | 6,0 | 23 | 5,0 | 2,0 | 57,0 | 104,0 | 250 | 8,2 | 22030.0050 |

1) 统计平均值

| 尺寸 | | | WS | 行程 | 弹簧荷重 [1] | | | | 品号 |
|---|---|---|---|---|---|---|---|---|---|
| $d_1$ | $d_2$ | l | | s | $F_1$ ~ | $F_2$ ~ | max. | | |
| [mm] | | | [mm] | [mm] | [N] | | [°C] | [g] | |
| **M12** | 8,0 | 26 | 6,0 | 2,5 | 61,0 | 110,0 | 250 | 13,0 | 22030.0052 |
| **M16** | 10,0 | 33 | 8,0 | 3,5 | 68,0 | 142,0 | 250 | 32,0 | 22030.0056 |
| **M20** | 12,0 | 43 | 10,0 | 4,5 | 84,0 | 166,0 | 250 | 67,0 | 22030.0060 |
| **M24** | 15,0 | 48 | 12,0 | 5,5 | 127,0 | 237,0 | 250 | 106,0 | 22030.0064 |
| **不锈钢 ， 标准弹簧荷重** | | | | | | | | | |
| **M 3** | 1,5 | 8 | 1,5 | 0,4 | 3,0 | 4,5 | 250 | 0,2 | 22030.0203 |
| **M 4** | 2,5 | 12 | 2,0 | 0,8 | 8,5 | 14,0 | 250 | 0,6 | 22030.0204 |
| **M 5** | 3,0 | 14 | 2,5 | 0,9 | 8,0 | 14,0 | 250 | 1,2 | 22030.0205 |
| **M 6** | 3,5 | 15 | 3,0 | 1,0 | 11,0 | 18,0 | 250 | 1,7 | 22030.0206 |
| **M 8** | 4,5 | 18 | 4,0 | 1,5 | 18,0 | 31,0 | 250 | 4,0 | 22030.0208 |
| **M10** | 6,0 | 23 | 5,0 | 2,0 | 24,0 | 45,0 | 250 | 8,0 | 22030.0210 |
| **M12** | 8,0 | 26 | 6,0 | 2,5 | 26,0 | 49,0 | 250 | 12,0 | 22030.0212 |
| **M16** | 10,0 | 33 | 8,0 | 3,5 | 41,0 | 86,0 | 250 | 32,0 | 22030.0216 |
| **M20** | 12,0 | 43 | 10,0 | 4,5 | 56,0 | 111,0 | 250 | 67,0 | 22030.0220 |
| **M24** | 15,0 | 48 | 12,0 | 5,5 | 81,0 | 151,0 | 250 | 106,0 | 22030.0224 |
| **不锈钢 ， 增加 弹簧荷重** | | | | | | | | | |
| **M 3** | 1,5 | 8 | 1,5 | 0,4 | 5,0 | 9,0 | 250 | 0,3 | 22030.0243 |
| **M 4** | 2,5 | 12 | 2,0 | 0,8 | 12,0 | 18,0 | 250 | 0,6 | 22030.0244 |
| **M 5** | 3,0 | 14 | 2,5 | 0,9 | 15,0 | 22,0 | 250 | 1,2 | 22030.0245 |
| **M 6** | 3,5 | 15 | 3,0 | 1,0 | 19,0 | 28,0 | 250 | 1,8 | 22030.0246 |
| **M 8** | 4,5 | 18 | 4,0 | 1,5 | 36,0 | 62,0 | 250 | 4,0 | 22030.0248 |
| **M10** | 6,0 | 23 | 5,0 | 2,0 | 57,0 | 104,0 | 250 | 8,2 | 22030.0250 |
| **M12** | 8,0 | 26 | 6,0 | 2,5 | 61,0 | 110,0 | 250 | 13,0 | 22030.0252 |
| **M16** | 10,0 | 33 | 8,0 | 3,5 | 68,0 | 142,0 | 250 | 32,0 | 22030.0256 |
| **M20** | 12,0 | 43 | 10,0 | 4,5 | 84,0 | 166,0 | 250 | 67,0 | 22030.0260 |
| **M24** | 15,0 | 48 | 12,0 | 5,5 | 127,0 | 237,0 | 250 | 106,0 | 22030.0264 |

[1] 统计平均值

## 应用范例

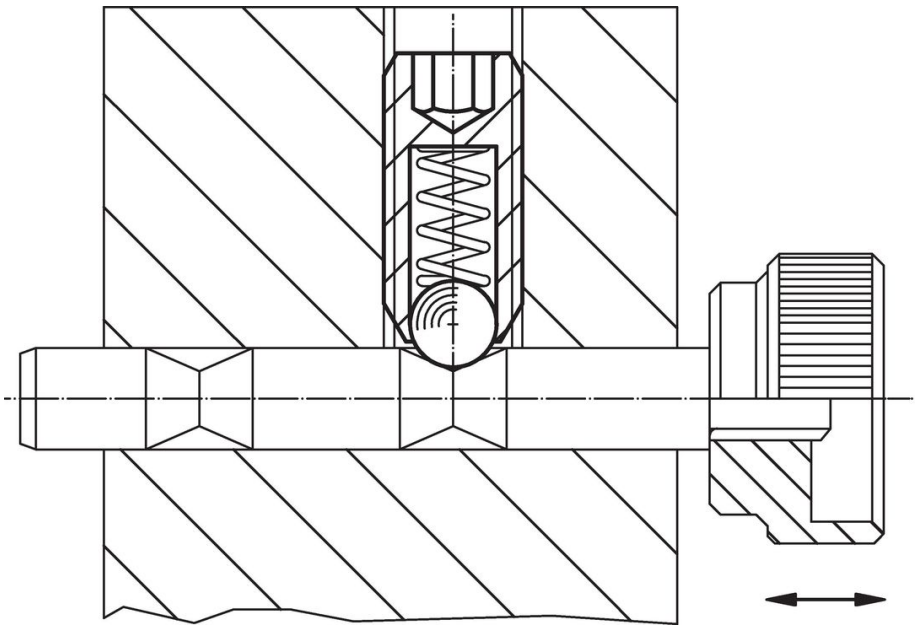

## 遵守

For detailed compliance information please select the desired article number.